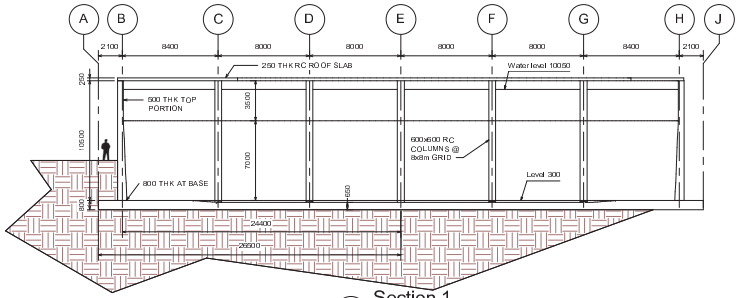


3 Section 1
1 : 200

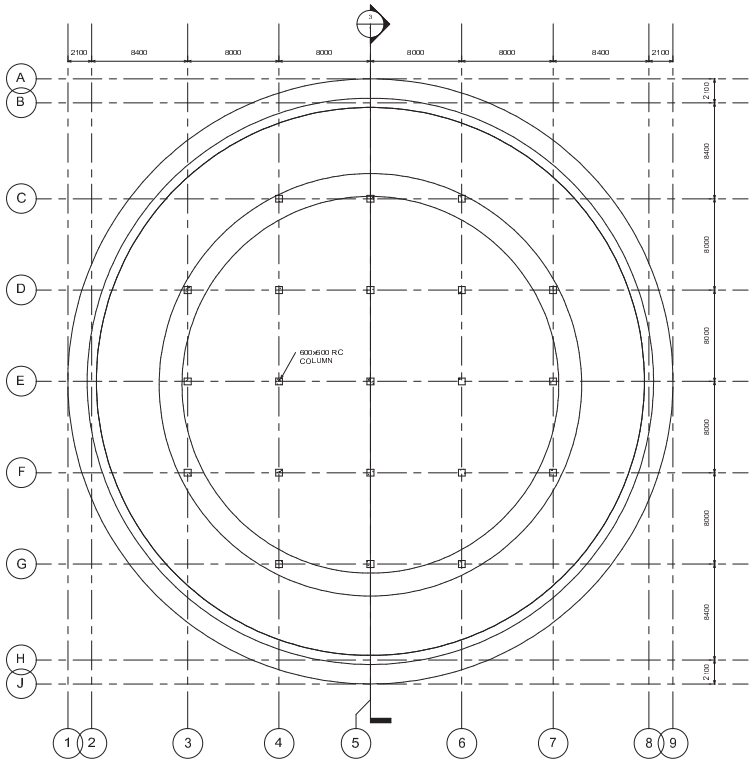


2 Plan View
1 : 200

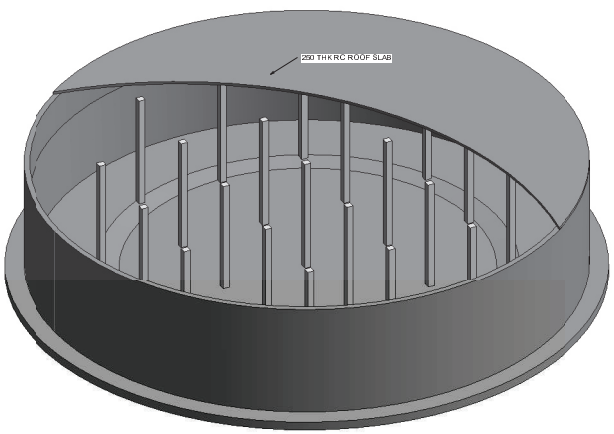


1 Tank Option A3

## Material Summary - refer to 109088-SDR-001

| A3 | Round Tank (New) | | |
|---|---|---|---|
| | | Volume (m³) | Rebar (T) |
| | **Structural Concrete** | | |
| Roof | 250 thk - 30 Mpa | 483 | 60.4 |
| Columns | 600 SQ 35 Mpa | 80 | 20.0 |
| Tank | 500 thk RC - 35 MPa | 309 | 30.0 |
| Tank | 600 thk RC - 35 MPa | 316 | 47.4 |
| Tank | 650 thk RC - 35 MPa | 691 | 103.6 |
| Footing | 800 thk RC - 35 MPa | 1,169 | 175.4 |
| | **Total** | **3,078** | **457.6** |
| | **Water** | **15,949** | |

CONCEPT DESIGN ~25% ACCURACY - NOT FOR CONSTRUCTION

STRUCTURAL CONCRETE NOTES (U.O.N.)

- REFER ANY DISCREPANCIES TO THE ENGINEER PRIOR TO COMMENCEMENT OF WORK,
- OBTAIN ENGINEERS WRITTEN AUTHORIZATION FOR ALL AMENDMENTS PRIOR TO COMMENCEMENT OF WORK,
- FOUNDING LEVEL IS DEPENDANT ON GROUND CONDITIONS, AND FINAL LEVELS WILL BE DETERMINED BY CLIENT ON SITE,
- DESIGN FOUNDATION BEARING PRESSURE FOR ALL FOUNDATIONS, UNLESS OTHERWISE STATED, IS 200kPa AT 500mm BELOW GL,
- ALL CONCRETE WORK IS TO BE FOUNDED ON AN IN-SITU ENGINEERED MATTRESS DESIGNED TO PROVIDE THE REQUIRED BEARING CAPACITY,
- DESIGN ACCORDING TO SANS DESIGN CODES,
- CONCRETE STRENGTHS AS 28 DAYS:
WATER RETAINING REINFORCED CONCRETE: 35/19 (35MPa),
REINFORCED CONCRETE: 30/19 (30 MPa),
BLINDING CONCRETE: 10/19 (10MPa),
- MINIMUM CONCRETE COVER TO REINFORCEMENT - 50mm SIDES AND 50mm TOP & BOTTOM,
- 50mm BLINDING TO BE PROVIDED UNDER FOUNDATIONS,
- ALL CONCRETE MUST BE MOIST CURED BY AN APPROVED METHOD FOR 7 DAYS AFTER FINALISE T OF CONCRETE, ENGINEER MAY ADJUST CURING PERIOD DEPENDING ON WEATHER CONDITIONS,
- ALL CIVIL WORKS SHALL COMPLY WITH SANS 1200, ACCURACY LEVEL 2,
- PROVIDE A 20mm x 20mm CHAMFER TO ALL EXPOSED CORNERS,
- SMOOTH OFF-SHUTTER FINISH TO EXPOSED CONCRETE,
- GROUTING "NHBRI STANDARD" (UON) OR SIMILAR APPROVED,
- ALL HOLD BOLTS TO BE GR. 4.8 HOT DIP PED GALV UON,

STRUCTURAL STEELWORK NOTES (U.O.N.)

- ALL DESIGN WORKS SHALL BE IN ACCORDANCE WITH SANS DESIGN CODES,
- STRUCTURAL STEEL (EXCEPT SMALL ANGLES) WILL BE GRADE 350 S JR,
- PLATEWORK AND SMALL ANGLES MAY BE GR 300 WA, 350WA OR S355JR,
- ALL WELDS SHALL BE A MINIMUM OF 6mm CONTINUOUS FILLETS OR FULL PENETRATION BUTTS,
- ALL WELDING SHALL COMPLY TO SANS CODE OF PRACTICE 044 (AWS D1.1),
- ALL GUSSET PLATES SHALL BE 8mm THICK U.O.S,
- ALL OTHER STRUCTURAL PLATEWORK TO BE 8mm THK, TO SANS 1431 GRADE 300WA,
- ALL STEELWORK TO BE HOT DIP GALVANISED,

AURECON MUST REVIEW AND APPROVE ALL DRAWINGS BASED ON THIS DESIGN PRIOR TO CONSTRUCTION THEREOF,

Stauch Vorster Architects

APT Quantity Surveyors

aurecon
www.aurecongroup.com

CLIENT

Eskom

| REV | DATE | REVISION DETAILS | APPROVED |
|---|---|---|---|
| | | | |

| SCALE | SIZE |
|---|---|
| 1 : 200 | A1 |

DRAWN: L.LEUKES
DESIGNED: S.ROSOCHACKI
CHECKED: S.ROSOCHACKI
APPROVED: Approver
DATE: 21/02/2014

PROJECT: Koeberg Beyond Design

TITLE: Hardened Water Supply Concepts
Tank Option A3

DRAWING NUMBER

| PROJECT No. | | AREA | | TYPE | | DISC - NUMBER | | REV |
|---|---|---|---|---|---|---|---|---|
| 109088 | - | 03 | - | DWG | - | 1 | - | |